NAH-3-0029/2017
INSPECTION BODY

LEEA

TÜVRheinland®
Precisely Right.

Attachment 6-MS-0046851-Rev01

INSPECTION REPORT

Report No.: TRG08C2025-1967 **Date of Inspection:** 22-Nov-2025

Name and Address of the Owner	**Place of Inspection**
SULZER RES QATAR DOHA QATAR WO# 17462209018	DUTEST YARD - STREET: 10, INDUSTRIAL AREA
Maker or Supplier	**Reference**
DUTEST	CLIENT'S REQUIREMENT

Subject: Plate Clamp

This is to report that the under signed, a competent TUV Rheinland representative did attend to examine this equipment to ascertain the safe working condition of the equipment. At the time of examination indicated, the said equipment has no indigenous injury or sighted deformation.

Overall dimension : 80 mm (L) x 75 mm (W) X 102 mm (H)
Lifting eye dimension : 20 mm
Jaw width : 23 mm
Thread hole dia : 16 mm
YOM : 10/2024
SWL : 2t
Drawing no : DQ/25-24, REV 00
Date : 15 -07-2024

Observation:

At the time of examination equipment found in good working order with no major defects that would compromise its safe operation.

Previous Cert. No.: TRG09C16152-DQ55/0518

Date of Last Examination	Date of Issue	Date of Next Examination
23 - 10 - 2024	24-Nov-2025	21-May-2026

Authorized Name: Udayakumar. G **Surveyor's Name:** M Ali Inam

Authorized Signature: **Surveyor's Signature:**

This report will become null and void in the event that the equipment is modified without notification after the date of inspection

TÜVRheinland® 100008 Industrial Services

DNV

CERTIFICATE OF THOROUGH EXAMINATION OF LIFTING GEAR

Certificate No:
A1679835-4

Date of Inspection:
25-March-2025

Name and Address of the Owner: M/s. SULZER ROTATION EQUIPMENT SERVICES P.O BOX 12975, DOHA, STATE OF QATAR	**Place of Inspection:** DUTEST YARD – STREET 49 INDUSTRIAL AREA - STATE OF QATAR **DNV Order No.:** A1679835
Manufacturer OR Supplier: DUTEST QATAR W.L.L	**Reference Standard:** BS EN 13155:2020

ID No.	Qty.	Equipment Description	Test Load Applied (Tonne)	SWL (Tonne)
DQ55/0518 **DQ55/0519** **DQ55/0520** **DQ55/0521**	**04**	**PLATE CLAMP** Overall Dimension : 80 mm (L) x 75 mm (W) x 102 mm (H) Lifting Eye Dimension : 15 mm Thickness x 20 mm Hole Dia. Jaw Width : 23 mm Thread Hole Dia. (Locking Nut) : 16 mm Y.O.M : 10/2024 Drawing No.: DQ/25-24 REV 1 dated 16.07.2024 Design Review Report No.: TUVR-24093-262008631-DRR-01 Rev.0 dated 21.10.2024 COC No.: DQ-PC-3062/24 dated 23.10.2024 Note: Shall be used in pair only. **Identification of Measuring/Testing Tools:** Vernier Caliper Sl. N° : 17105296 Certificate N° : VCS2024-4710 due date 23.06.2025	**Nil**	**2.0 t** (Per Pair)

Date of Last Examination	Date of Next Examination	Date of Last Proof Load Test	Date of Next Proof Load Test
23.10.2024 TRG09C16152-DQ55/0518	25.09.2025	23.10.2024 TRG09C16152-DQ55/0518	Not Applicable

Authorized Name: ***NITHIN RAVINDRAN*** **Surveyor's Name:** ***ROBIN JOHNY***

Authorized Signature: **Surveyor's Signature:**

DNV 1864 SAFEGUARDING THE ENVIRONMENT - PROPERTY AND PEOPLE INSPECTION

LEGAL DISCLAIMER: **THIS IS TO CERTIFY THAT** the above competent surveyor thoroughly examined the lifting equipment in the above-mentioned place as per relevant International Standard. Unless otherwise stated in the applicable contract with the holder of this document, or following from mandatory law, the liability of DNV AS, its parent companies and subsidiaries as well as their officers, directors and employees ("DNV") arising from or in connection with the services rendered for the purpose of the issuance of this document or reliance thereon, whether in contract or in tort (including negligence), shall be limited to direct losses and under any circumstance be limited to 300,000 USD.

GL Noble Denton WLL (DNV QATAR), Ghanem Al Thani Business Centre, Office No.:202, Zone 23, Bin Mahmoud, P.O.Box 22933, Doha, Qatar
Tel: +974 4402 7333 Fax: +974 4466 1969 E-mail: GLNDqatar@dnv.com

Copyright © DNV 2021. All rights reserved.
The contents of the present Certificate shall not be reproduced except in full without the approval of the Inspection Body and the client

DUTEST QATAR W.L.L.
CRANE & LIFTING EQUIPMENT ENGINEERS
GENERAL MECHANICAL WORKS
TEYSEER GROUP

دوتست قطر ذ.م.م.
مهندسون معدات الآلات الرافعة
عمل ميكانيكا عام

P. O. Box : 40523 Al-Wakalat Street (Between 18 &19) Ind. Area, State of Qatar
Tel. : 4458 5497 / 4458 5473
Fax : 4458 5467 / 4460 1445
C. R. No. : 19218
Capital : QR. 1,000,000

ص.ب: ٤٠٥٢٣، شارع الوكالات (بين ١٨-١٩) المنطقة الصناعية
الدوحة - قطر
تليفون : ٤٤٥٨ ٥٤٩٧ / ٤٤٥٨ ٥٤٧٣
فاكس : ٤٤٥٨ ٥٤٦٧ / ٤٤٦٠ ١٤٤٥
رخصة تجارية رقم: ١٩٢١٨
رأس المال: ١,٠٠٠,٠٠٠ ريال قطري

www.dutestqatar.com
operations@dutestqatar.com

CERTIFICATE OF CONFORMITY
CERTIFICATE NUMBER: DQ-PC-3062/24

This is to certify that the **PLATE CLAMP** describe herewith has been designed, fabricated and testedin accordance with **BS EN 13155 / QP-PAI-STD-005 REV-00**

Description:

Maker / Supplier: DUTEST QATAR W.L.L.

Fabricator's Serial No: DQ 55/0518, DQ 55/0519, DQ 55/0520 & DQ 55/0521

Dimension: 80 mm (L) x 75mm (W) x 102mm (H)

Year of manufacture: 10/ 2024

Working Load Limit: 2 Ton

Qty: 4

DRW NO: DQ/25-24, REV-00, DTD-16/07/2024

This is specific to SULZER ROATATING EQUIPMENT SERVICES, DUTEST QATAR W/O:17362203062, PLATE CLAMP: DQ 55/0518, DQ 55/0519, DQ 55/0520 & DQ 55/0521

This document is valid till validity of latest reference standard as stated above for useat site

Name & Signature: **Mohamed Rahees**
Works Manager

Date: **23/10/2024**

TÜVRheinland®
Precisely Right.

TÜV Rheinland Gulf LLC

DESIGN REVIEW REPORT

PLATE CLAMP

Report No.	TUVR-24093-262008631-DRR-01	Revision	0
Place of Issue	Doha, Qatar	Date of Issue	October 21, 2024
Client	Dutest Qatar		

Information on Reviewed Structures	
Description	Plate Clamp
Reference Standards	BS EN 13155:2020, QP-PAI-STD-005 Rev.00 and other relevant standards
Working Load Limit	2 tonnes Note: To be lifted using 2 Plate Clamps.
Sling angle from vertical	45° (maximum)
Material	Steel plates : S355JR Securing bolt : M16 Gr. 8.8

This is to certify that a structural design review has been conducted for the **Plate Clamp** at the request of **Dutest Qatar**. The Plate Clamp was found in compliance to the minimum design requirements of **BS EN 13155:2020**, **QP-PAI-STD-005 Rev.00** and other relevant standards. Refer to the findings and comments in Part 4 of this Design Review Report.

For TÜV Rheinland Gulf LLC:	
Prepared by:	Reviewed / Approved by:
REY DENZIL P. OBNIMAGA, MSCE Sr. Civil/Structural Engineer Infrastructure & Project Supervision Department	**MOHAMED ABDUL RAHMAN SIDDIQUI** Local Field Manager Infrastructure & Project Supervision Department

Statutory Warning:
This document has been furnished solely for the purpose for which it is provided. Content of this Document shall not be reproduced, distributed, or communicated to any third party without the written consent of TUV Rheinland. If this Document is used for a purpose other than that for which it is intended or where it is disclosed to or used by a third party, TUVR does not assume any liability or owe any duty of care and TUVR reserves all the rights to proceed with legal action for misuse of information.

CONTENTS

LIST OF FIGURES 2

LIST OF TABLES 2

1 INTRODUCTION 3

2 SCOPE OF SERVICE 3

3 REFERENCES 3

3.1 Reviewed Documents 3

3.2 Design Codes and Standards 3

4 DESIGN REVIEW FINDINGS 4

5 CONCLUSION 5

LIST OF FIGURES

Figure 4.1: Details of Plate Clamp 4

Figure 4.2: Von Misses stresses in Plate Clamp at Elastic and Yielded Condition per BS EN 13155:2020 5

LIST OF TABLES

Table 3-1: List of reviewed documents 3

1 INTRODUCTION

TÜV Rheinland Gulf LLC, hereinafter referred to as TUVR, issued this Design Review Report, hereinafter referred to as Report, to Dutest Qatar, hereinafter referred to as Client, for the Design Review of the Plate Clamp as per referenced codes and standards (see Section 3.2 of this Report).

2 SCOPE OF SERVICE

The scope of the design review of the Plate Clamp per minimum requirements per referenced codes and standards (see Section 3.2 of this Report) includes the following:

a) Review of design documents (see Part 3.1) to check adequacy and compliance of the analysis, loads, and design criteria.
b) Independent analysis and calculations to verify the strength and serviceability performance of the structural members and connections.

The content of this Report shall not relieve the contractor, designer, or any other involved parties from their respective contractual obligations.

3 REFERENCES

3.1 Reviewed Documents

Table 3-1: List of reviewed documents

Title/Description	Document No.	Rev.	Date
[A] Design Report:			
DESIGN ENGINEERING CALCULATION REPORT OF PLATE CLAMP (PAIR) – SAFE WORKING LOAD 2 TE	DQ/PLATE CLAMP-01	-	-
[B] Drawings:			
PLATE CLAMP	DQ/25-24	1	16/07/24
GENERAL ARRANGEMENT – PLATE CLAMP	DQ/26-24	1	16/07/24

3.2 Design Codes and Standards

[1] BS EN 13155:2020 – Crane – Safety – Non-fixed load lifting attachments

[2] QP-PAI-STD-005 Rev.00 – QP Standard for Lifting Equipment and Operations

[3] EN 13001-1 – Cranes – General design – Part 1: General principles and requirements

[4] EN 13001-2 – Crane safety – General design – Part 2: Load actions

[5] EN 13001-3-1 – Cranes – General design – Part 3-1: Limit states and proof competence of steel structure

4 DESIGN REVIEW FINDINGS

The following are the findings of the design review on the redesigned Plate Clamp:

(1) The design review is limited only to the verification for proof of mechanical strength of the Plate Clamp. The review on the adequacy of the lifting sets (slings, shackle, links, etc.) is excluded. Nonetheless, the Client must ensure that the lifting set components musty have sufficient strength and have the required certifications.

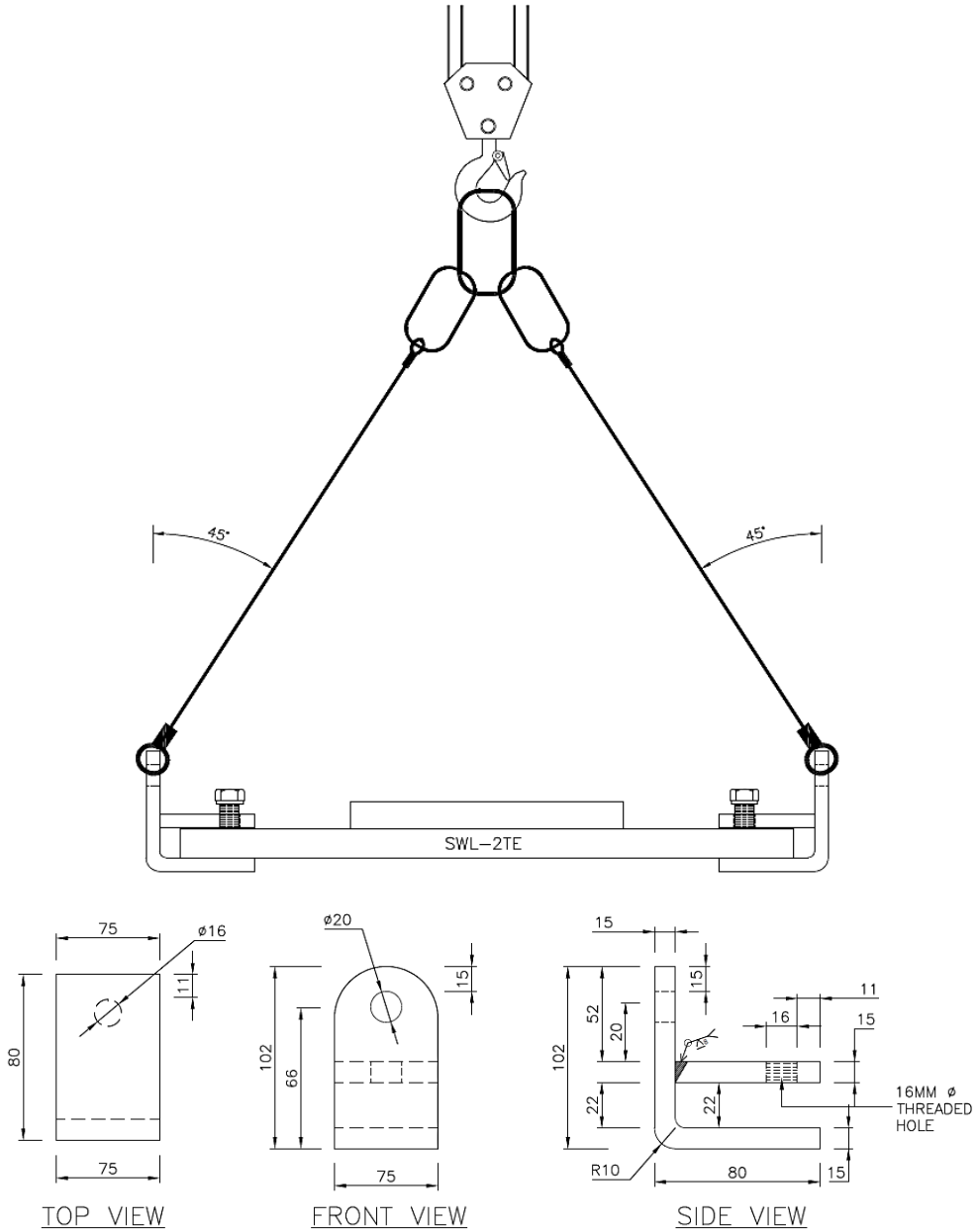

Figure 4.1: Details of Plate Clamp

(2) As shown in Figure 4.1 above, the vertical load of 2 tonnes will be lifted using two plate clamps with sling angle from vertical of 45° (maximum). This is considered as the final and maximum loading condition. It is the responsibility of the client to ensure that

the actual lifting operation will not involve loads that could potentially results to stress greater than the design loading condition as permitted in BS EN 13155:2020. Such condition deemed beyond the scope of this design review.

(3) The Plate Clamp shall be limited for use up to 16,000 load cycles only.

(4) The design assumptions, boundary conditions and acceptance criteria were reviewed and found acceptable.

(5) The Client is to ensure that the securing bolts are tight enough to secure the load during lifting.

(6) TUVR has performed an independent analysis and design verification of the Plate Clamp following the design requirements of BS EN 13155:2020 and other relevant design standards (see list in Part 3.2). Based on the results of the analysis and design verification, it was found that the Plate Clamp sufficient mechanical strength to carry the load of 2 tonnes.

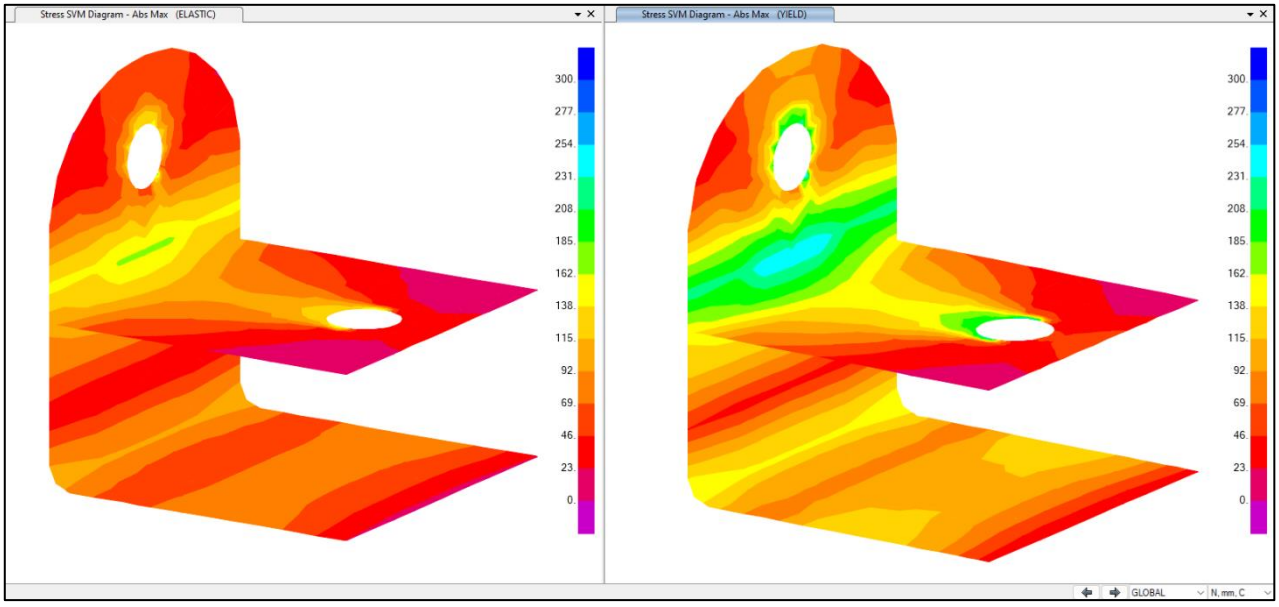

Figure 4.2: Von Misses stresses in Plate Clamp at Elastic and Yielded Condition per BS EN 13155:2020

5 CONCLUSION

Based on the findings of the review of the documents provided by the Client and the results of the design verification, TUVR concludes that the design of the Plate Clamp is following the minimum requirements of BS EN 13155:2020, QP-PAI-STD-005 Rev.00 and other relevant standards.

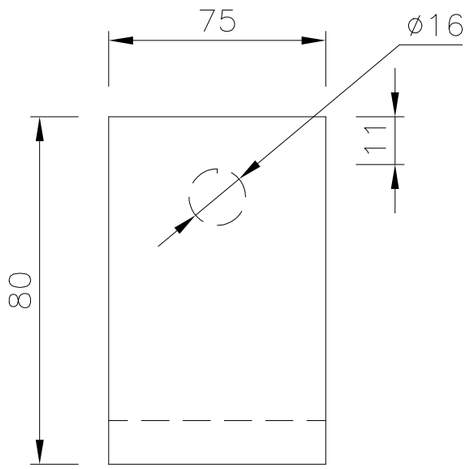

TOP VIEW

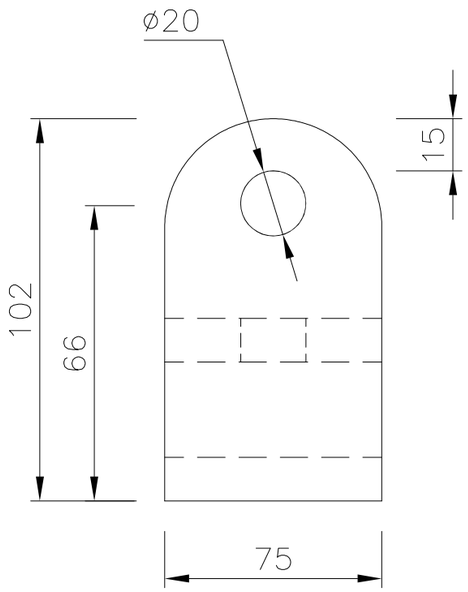

FRONT VIEW

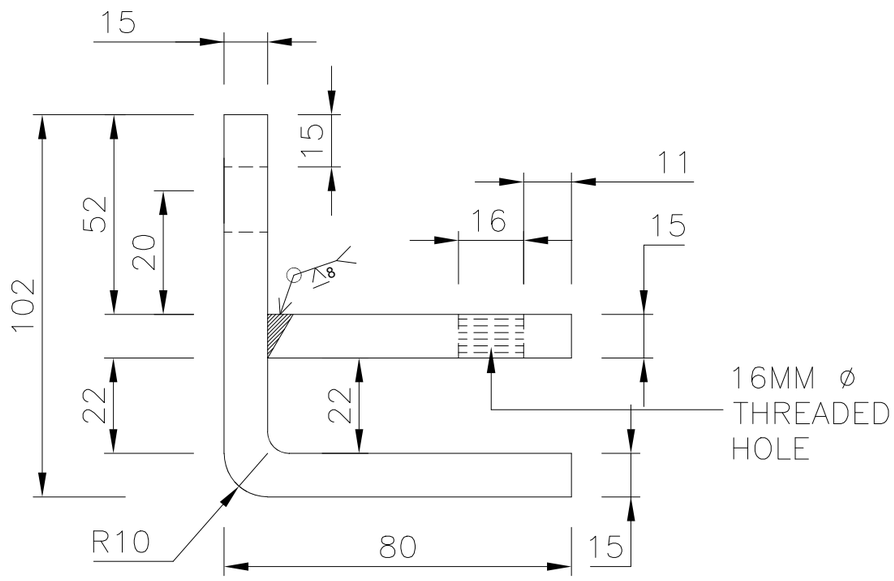

SIDE VIEW

QTY–6Nos

NOTES :–

1. All the dimensions are in MM
2. All the steels with Grade –S355JR
3. Bolt – M16.
4. Design as per BS EN 13155/ QP–PAI–STD–005–REV–00
5. Working Load Limit – 2TE
6. Sling Angle 45 Degree.
7. All steel are full penetration welding.
8. Plate Thickness 15mm.
9. Padeye suitable for 3.25T Shackle.
11. Bolt–M16x20mm , Grade–8.8

s/n	DATE	DESCRIPTION	REV.
1.	16/07/24	ISSUED FOR APPROVAL	00

DUTEST QATAR W.L.L.
CRANE & LIFTING EQUIPMENT ENGINEERS,
& GENERAL MECHANICAL WORKS
engineering@dutestqatar.com

This CAD drawing should not be altered DO NOT SCALE | THIRD ANGLE PROJECTION

DATE: 16/07/24 | APVD. DATE | A3

TITTLE: PLATE CLAMP

OFFICIAL STATUS | DRG NO.:DQ/25–24